DWG. No.	MC300258B1
TITLE	Liquid Vortex Flow Meter with Temperature Correction FML301-N drawing
CUSTOMER	

Model:

Specifications

Fluid: Pure water, Liquid chemicals

Flow rate: 0.3～2.5 L/min

Output signal:
Flow rate:Corrent 4～20mA or Pulse(1kHz@F.S.)
Temperature:1～5VDC(0～100℃)

Power supply: 12～24VDC

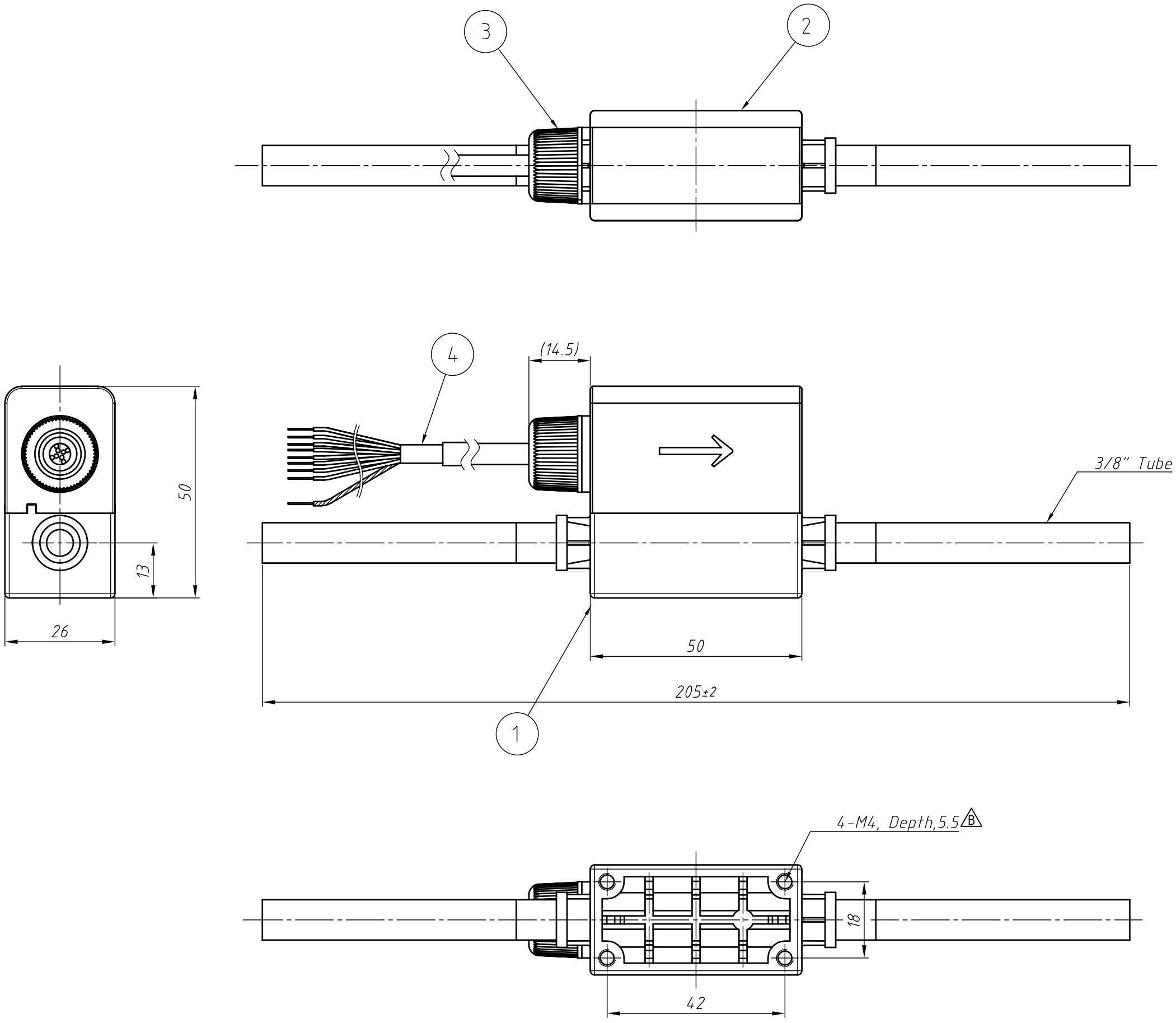

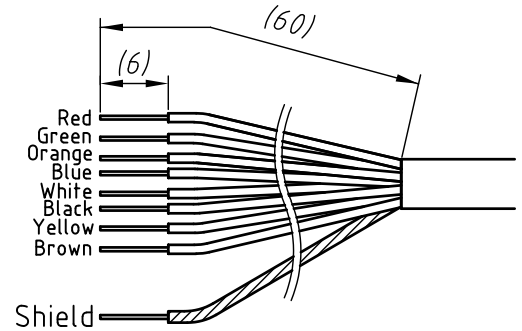

Table.1 ④Cable

Signal	Color
Power12-24VDC	Red
PowerCOM	Green
FlowOUT 4-20mA / Pulse※	Orange
FlowOUTCOM	Blue
Temp.OUT 1-5VDC	White
Temp.COM	Black
N.C.	Yellow
N.C.	Brown
Shield	

※ Open collector(80mA,30VDC Max.)

No.	NAME	SPECIFICATIONS	NOTES
4	Cable		3m, AWG26 Table.1
3	Nut	PBT	
2	Cover	PBT	
1	Body/Tube	NewPFA	

SCALE 1 : 1 PROJECTION

Rev.

B Change main body block(2-Φ4→4-M4) 1/Jul/2022

KOFLOC Corp.

DESIGNED	DRAWN	CHECKED	APPROVED
—	S.Yoshida		

DATE 2 / Feb / 2022

DWG. No.	MC300259B1
TITLE	Liquid Vortex Flow Meter with Temperature Correction FML302-N drawing
CUSTOMER	

Model:

Specifications

Fluid: Pure water, Liquid chemicals

Flow rate: 0.4～4L/min

Output signal:
Flow rate:Corrent 4～20mA or Pulse(1kHz@F.S.)
Temperature:1～5VDC(0～100℃)

Power supply: 12～24VDC

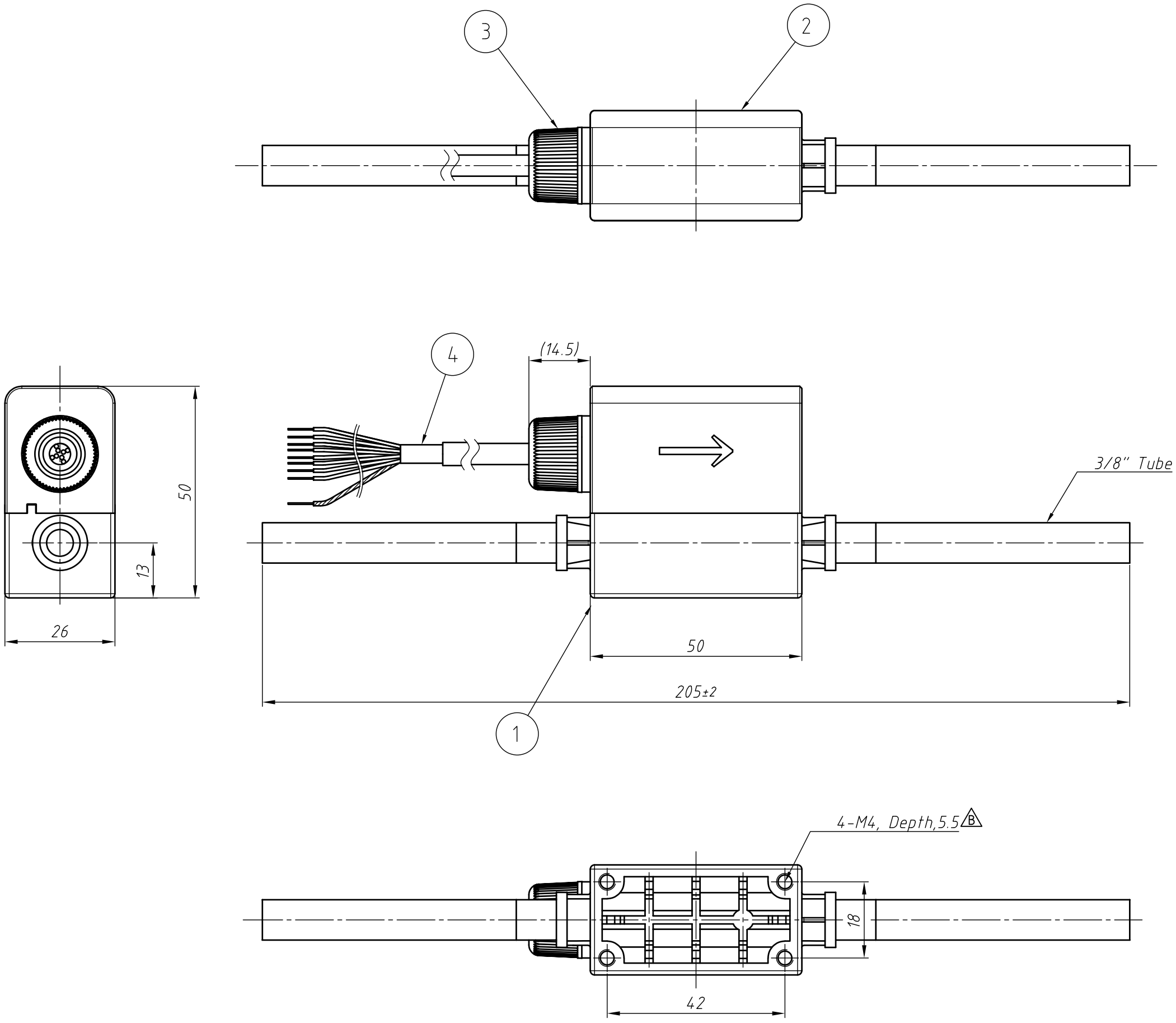

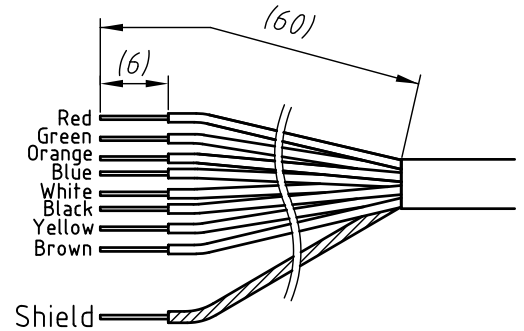

Table.1 ④Cable

Signal	Color
Power12-24VDC	Red
PowerCOM	Green
FlowOUT 4-20mA / Pulse※	Orange
FlowOUTCOM	Blue
Temp.OUT 1-5VDC	White
Temp.COM	Black
N.C.	Yellow
N.C.	Brown
Shield	

※ Open collector(80mA,30VDC Max.)

No.	NAME	SPECIFICATIONS	NOTES
4	Cable		3m, AWG26 Table.1
3	Nut	PBT	
2	Cover	PBT	
1	Body/Tube	NewPFA	

SCALE	1 : 1	PROJECTION	

Rev.

B Change main body block(2-Φ4→4-M4) 1/Jul/2022

KOFLOC Corp.

DESIGNED	DRAWN	CHECKED	APPROVED
—	S.Yoshida		

DATE 2 / Feb / 2022

DWG. No.	MC300260B1
TITLE	Liquid Vortex Flow Meter with Temperature Correction FML303-N drawing
CUSTOMER	

Model:

Specifications

Fluid: Pure water, Liquid chemicals

Flow rate: 2~16 L/min

Output signal:
Flow rate:Corrent 4~20mA or Pulse(1kHz@F.S.)
Temperature:1~5VDC(0~100℃)

Power supply: 12~24VDC

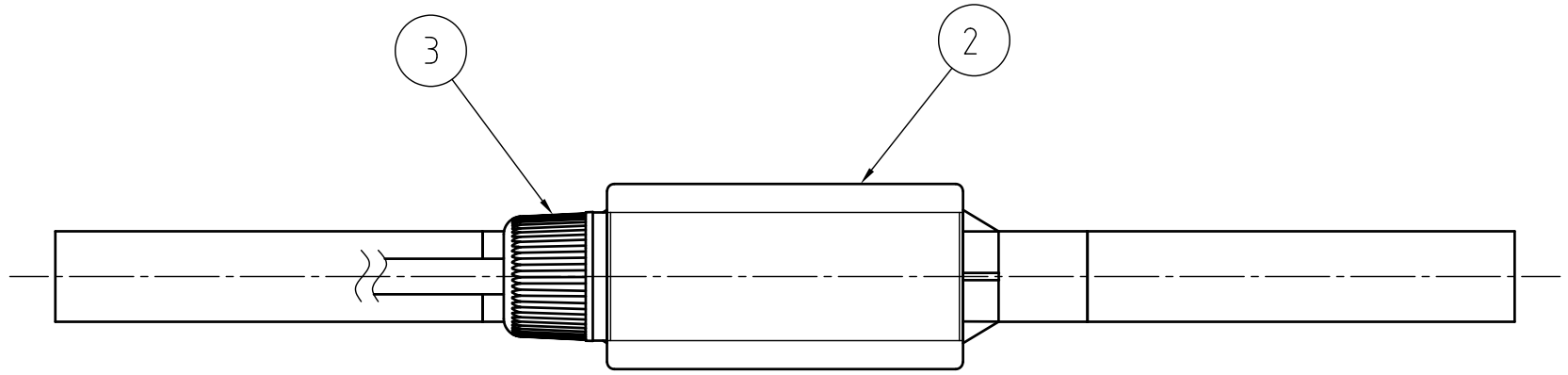

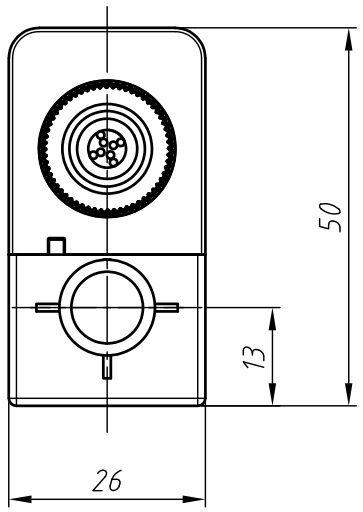

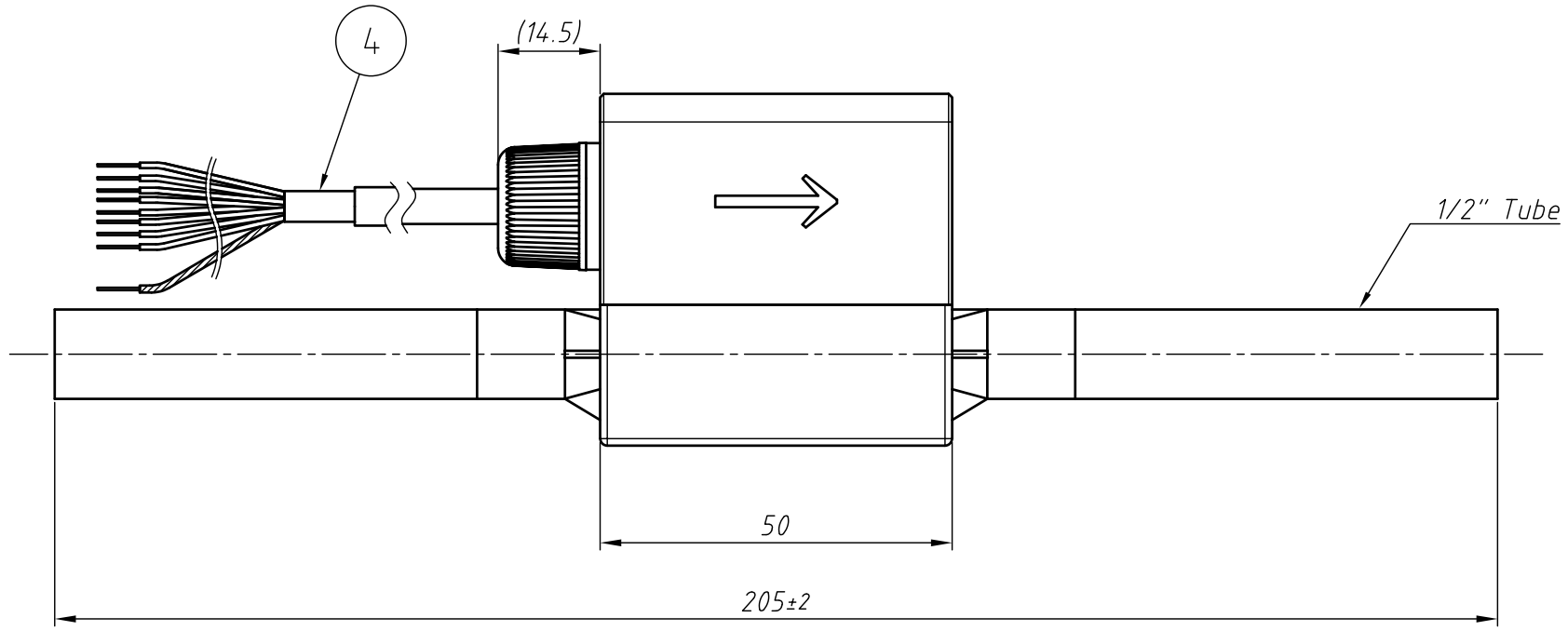

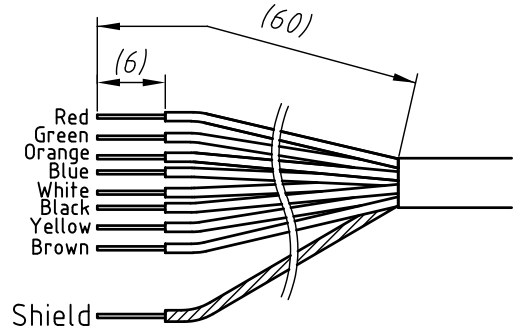

Table.1 ④Cable

Signal	Color
Power12-24VDC	Red
PowerCOM	Green
FlowOUT 4-20mA / Pulse※	Orange
FlowOUTCOM	Blue
Temp.OUT 1-5VDC	White
Temp.COM	Black
N.C.	Yellow
N.C.	Brown
Shield	

※ Open collector(80mA,30VDC Max.)

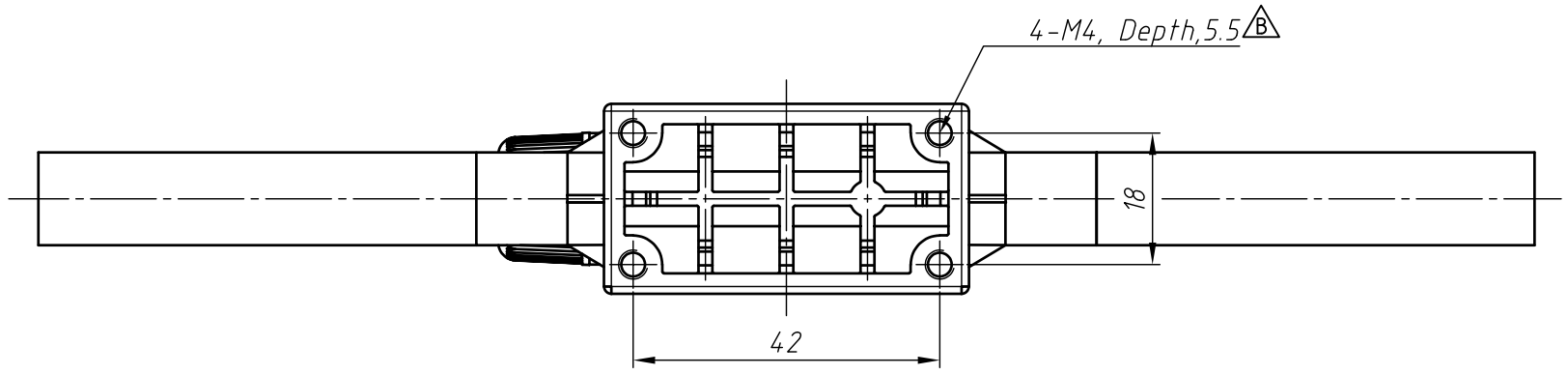

No.	NAME	SPECIFICATIONS	NOTES
4	Cable		3m, AWG26 Table.1
3	Nut	PBT	
2	Cover	PBT	
1	Body/Tube	NewPFA	

SCALE	1 : 1	PROJECTION	

Rev.	
B	Change main body block(2-Φ4→4-M4) 1/Jul/2022

KOFLOC Corp.

DESIGNED	DRAWN	CHECKED	APPROVED
—	S.Yoshida		

DATE	2 / Feb / 2022

DWG. No.	MC300261B1
TITLE	Liquid Vortex Flow Meter with Temperature Correction FML304-N drawing
CUSTOMER	

Model:

Specifications

Fluid: Pure water, Liquid chemicals

Flow rate: 5~50 L/min

Output signal:
Flow rate:Corrent 4~20mA or Pulse(1kHz@F.S.)
Temperature:1~5VDC(0~100℃)

Power supply: 12~24VDC

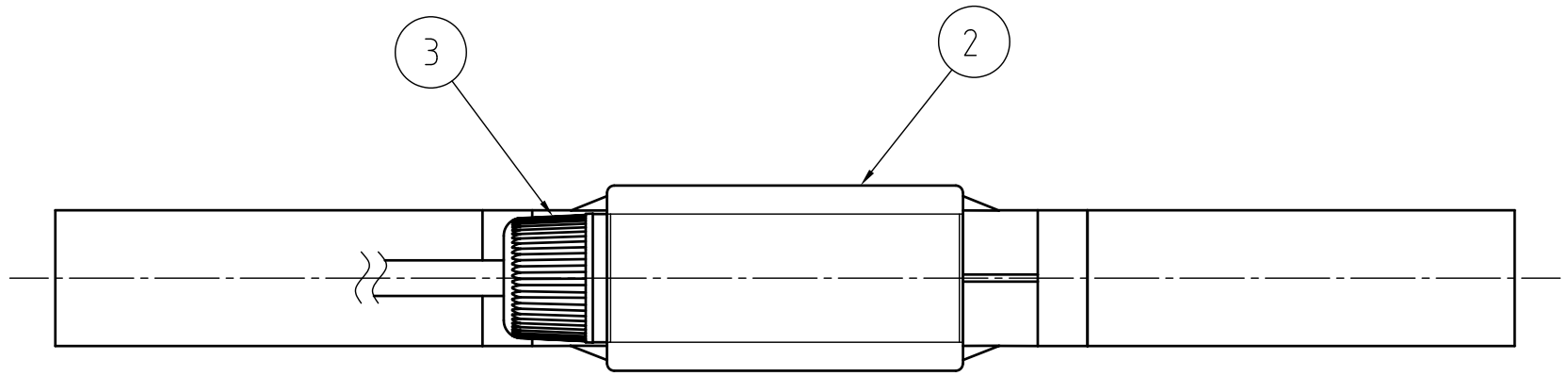

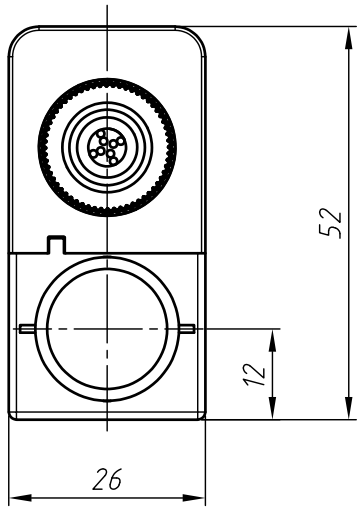

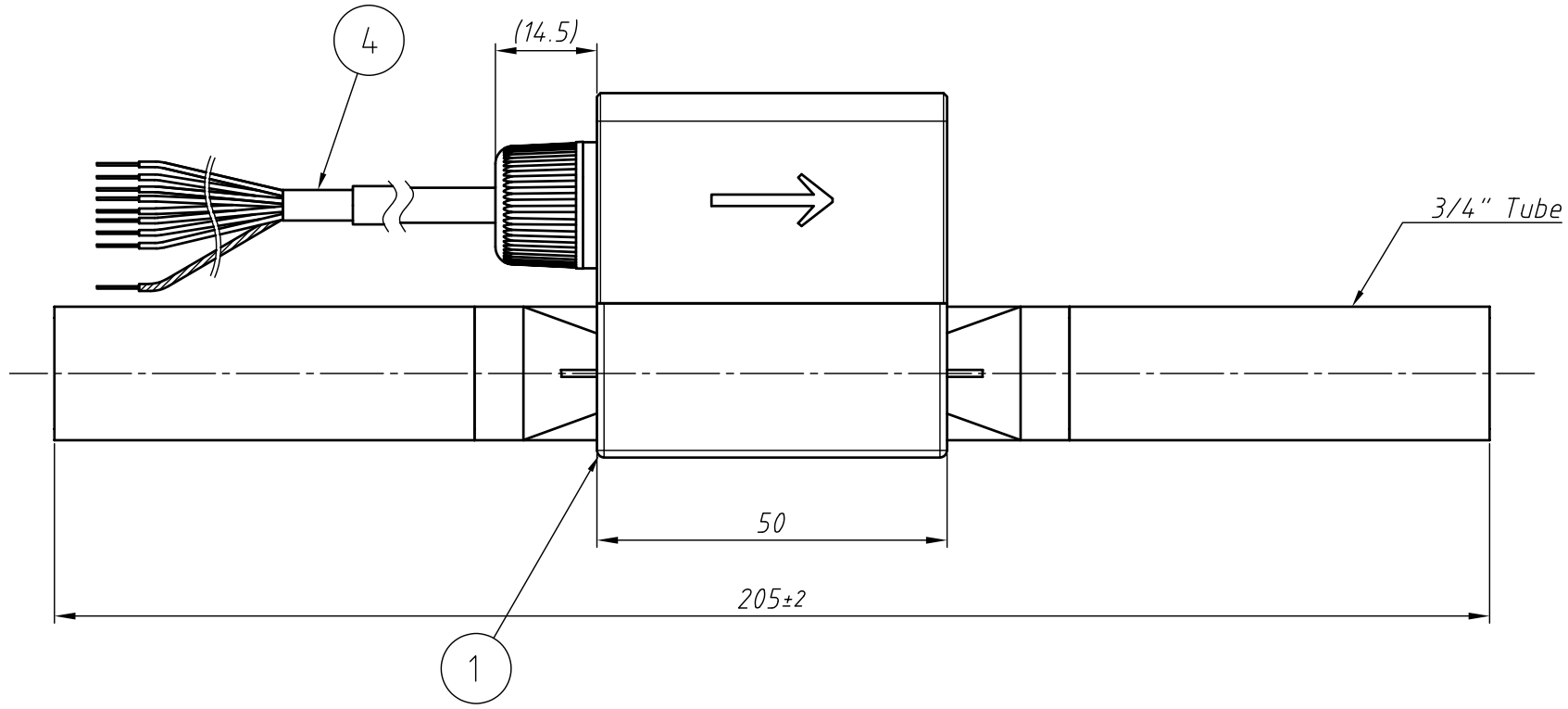

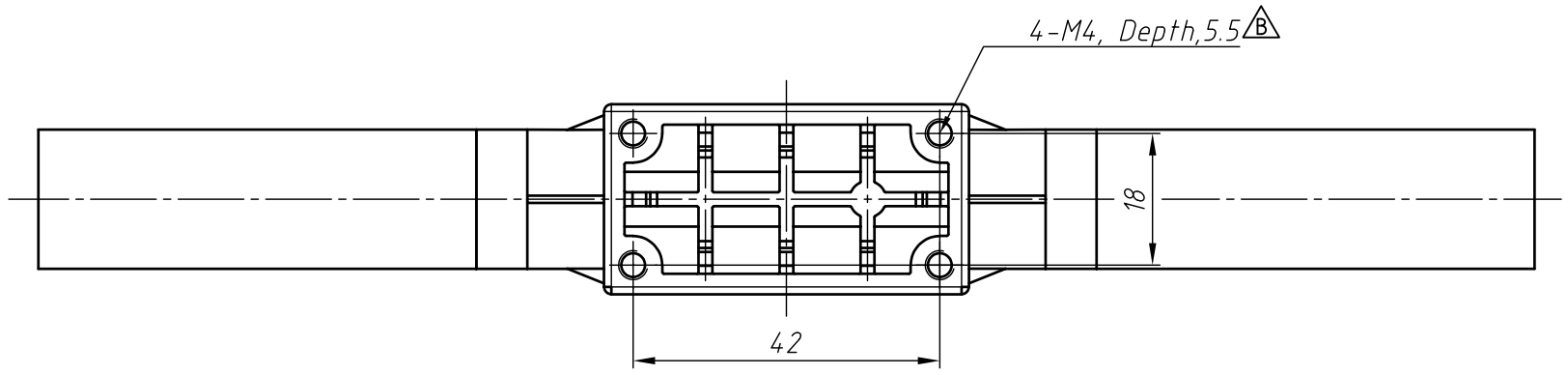

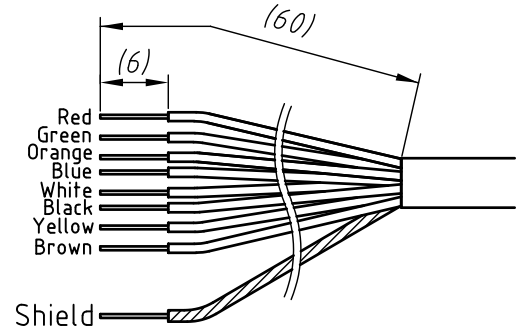

Table.1 ④Cable

Signal	Color
Power12-24VDC	Red
PowerCOM	Green
FlowOUT 4-20mA / Pulse※	Orange
FlowOUTCOM	Blue
Temp.OUT 1-5VDC	White
Temp.COM	Black
N.C.	Yellow
N.C.	Brown
Shield	

※ Open collector(80mA,30VDC Max.)

No.	NAME	SPECIFICATIONS	NOTES
4	Cable		3m, AWG26 Table.1
3	Nut	PBT	
2	Cover	PBT	
1	Body/Tube	NewPFA	

SCALE 1 : 1 PROJECTION

Rev.

B Change main body block(2-Φ4→4-M4) 1/Jul/2022

KOFLOC Corp.

DESIGNED	DRAWN	CHECKED	APPROVED
—	S.Yoshida		

DATE 2 / Feb / 2022

DWG. No.	MC300262B1
TITLE	Liquid Vortex Flow Meter with Temperature Correction FML305-N drawing
CUSTOMER	

Model:

Specifications

Fluid: Pure water, Liquid chemicals

Flow rate: 10～100 L/min

Output signal:
Flow rate:Corrent 4～20mA or Pulse(1kHz@F.S.)
Temperature:1～5VDC(0～100℃)

Power supply: 12～24VDC

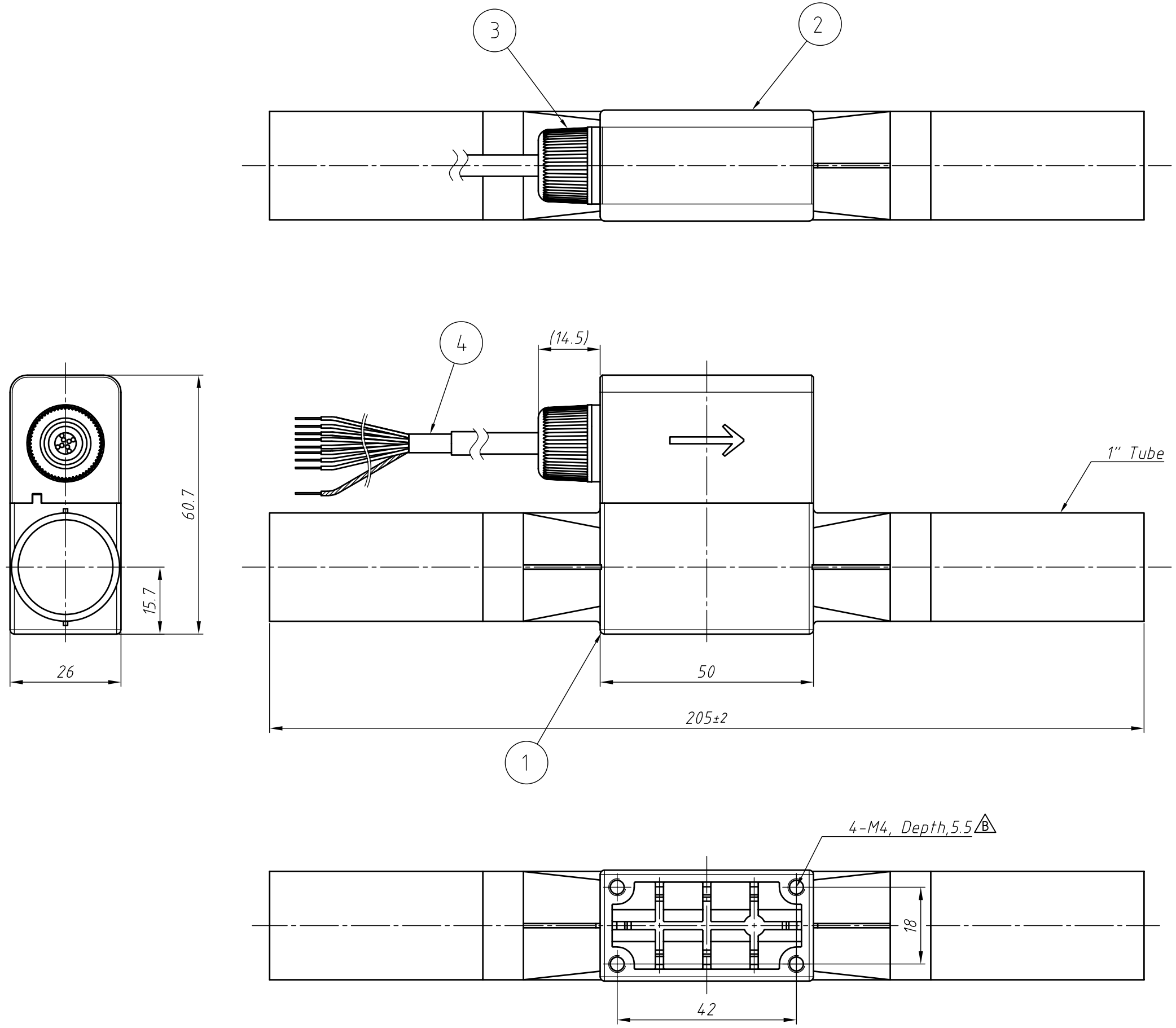

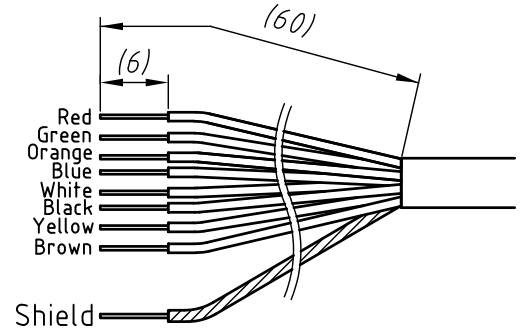

Table.1 ④Cable

Signal	Color
Power12-24VDC	Red
PowerCOM	Green
FlowOUT 4-20mA / Pulse※	Orange
FlowOUTCOM	Blue
Temp.OUT 1-5VDC	White
Temp.COM	Black
N.C.	Yellow
N.C.	Brown
Shield	

※ Open collector(80mA,30VDC Max.)

No.	NAME	SPECIFICATIONS	NOTES
4	Cable		3m, AWG26 Table.1
3	Nut	PBT	
2	Cover	PBT	
1	Body/Tube	NewPFA	

SCALE	1 : 1	PROJECTION	

Rev.	
B	Change main body block(2-Φ4→4-M4) 1/Jul/2022

KOFLOC Corp.

DESIGNED	DRAWN	CHECKED	APPROVED
—	S.Yoshida		

DATE	2 / Feb / 2022